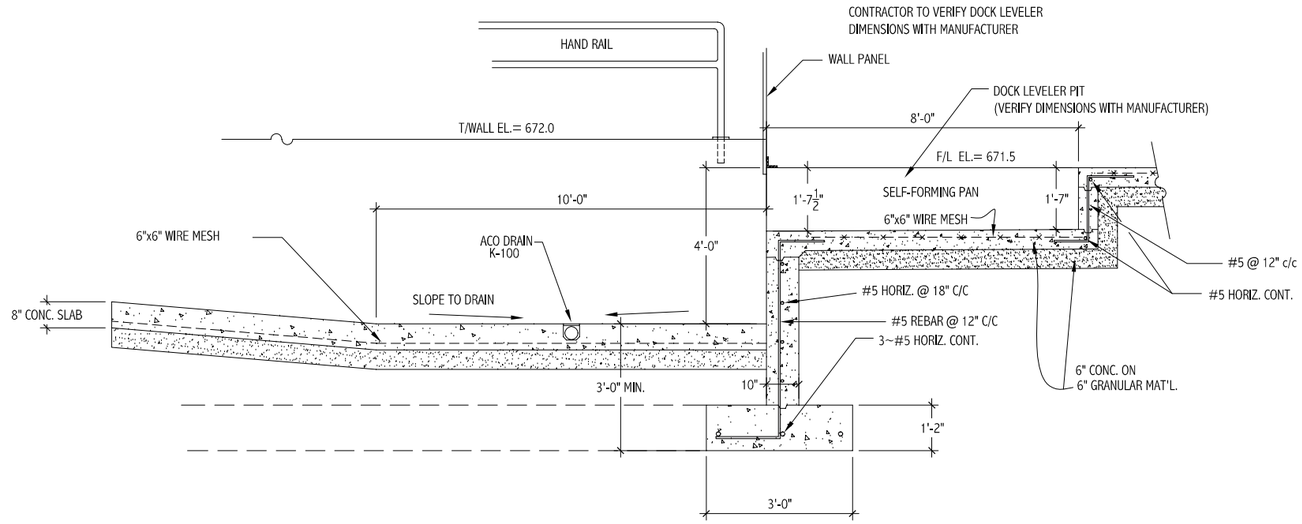

SECTION TRUCK WELL

C S3

SCALE: 1/2"= 1'-0

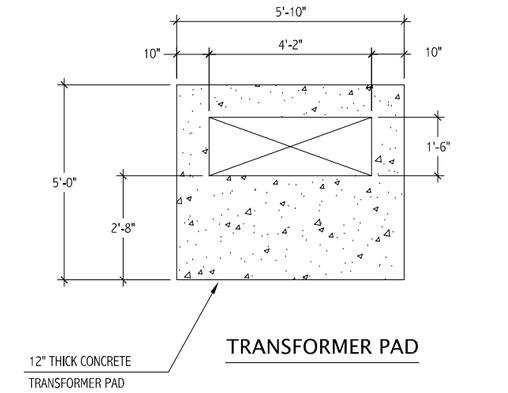

TRANSFORMER PAD

NOTE: VERIFY LOCATION AND DIMENSIONS WITH ELECTRICIAN AND ELECTRIC UTILITY

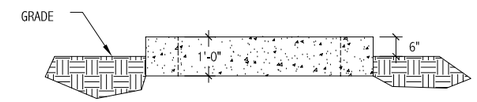

ELEVATION

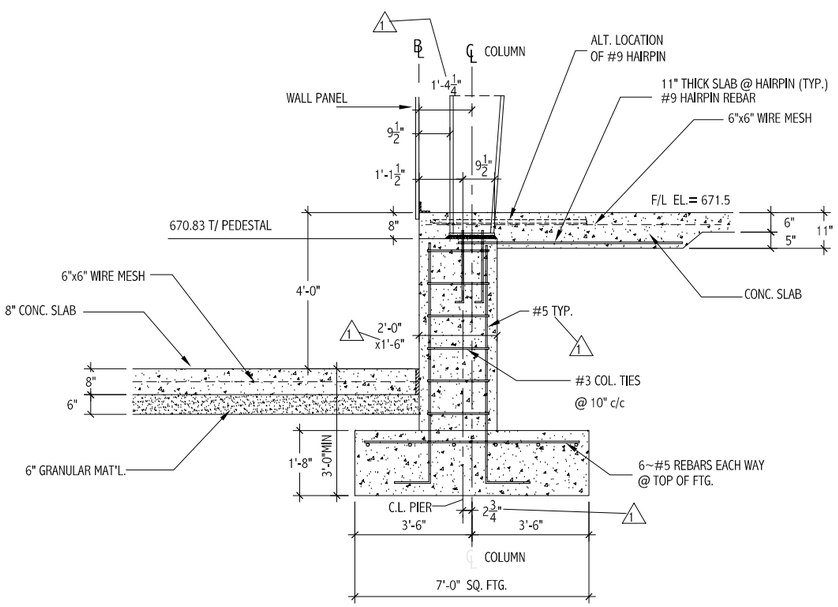

DETAIL FOOTING F3

SCALE: 1/2"=1'-0

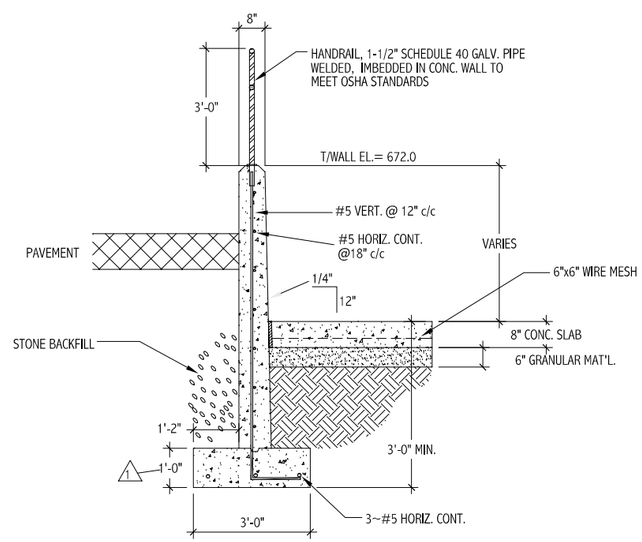

NOTE: ANCHOR BOLT LOCATIONS TO BE VERIFIED BY BUILDING ERECTOR

SECTION RETAINING WALL

B S3

SCALE: 1/2"=1'-0

NOTES

1. CONTRACTOR SHALL VERIFY ALL STEEL FRAMING DIMENSIONS, ANCHOR BOLT LOCATION & SIZE, BASE PLATE SIZE, AND ALL OTHER BUILDING DIMENSIONS WITH FINAL BUILDING DRAWINGS.

STATE OF OHIO
JAMES A. COLONY
52727
REGISTERED
PROFESSIONAL ENGINEER

DATE	ISSUE
05/08/01	DRW.
05/10/01	ISSUED FOR CONSTRUCTION
06/06/01	MISC REV

NEW COMMERCIAL BUILDING
LOT 16-C
WOOD-BRIDGE COMMONS
BOWLING GREEN, OH

COLONY + COLONY LTD.
CIVIL ENGINEERS
2726 Monroe St. Toledo, Oh 43606
419-243-4476 419-243-4686fax

DRAWING TITLE: DETAILS

JOB NO. 0051

DATE: MARCH 2001

SHT. NO. S3